Double Peak Star Tent

Double Peak Star Tents come in 4 different sizes, 13m, 16.4m, 19.1m and 21.85m
Choose your size dependent upon space available and your event requirements

Double Peak 13m x 5mH

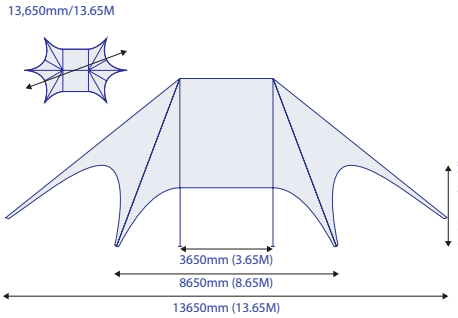

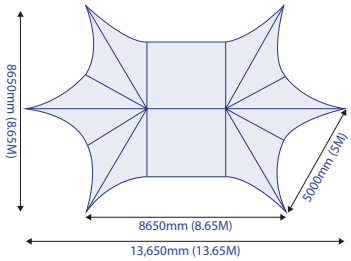

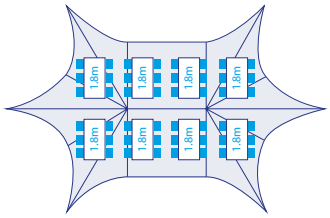

Suggested capacity for seating with chairs - 110

Suggested capacity for seating with tables - 48

Double Peak 16.4m x 6mH

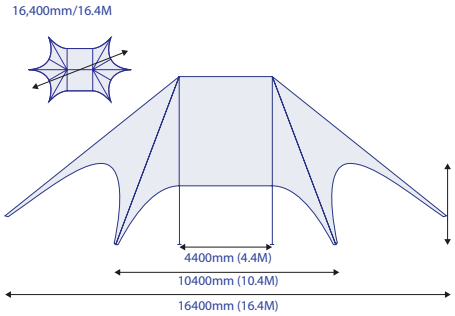

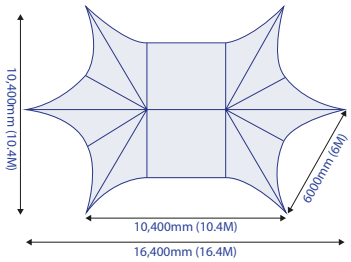

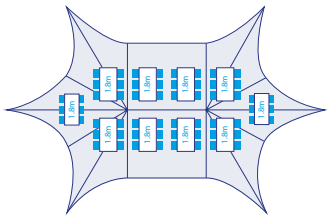

Suggested capacity for seating with chairs - 140

Suggested capacity for seating with tables - 60

Double Peak 19.1m x 6mH

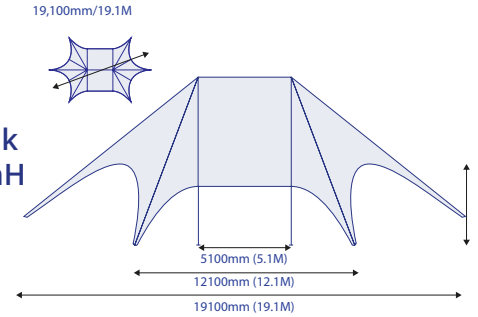

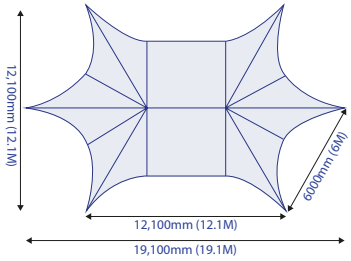

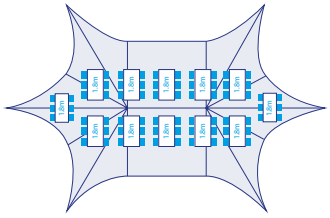

Suggested capacity for seating with chairs - 160

Suggested capacity for seating with tables - 72

Double Peak 21.85m x 6mH

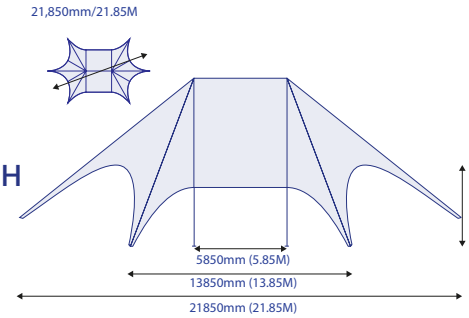

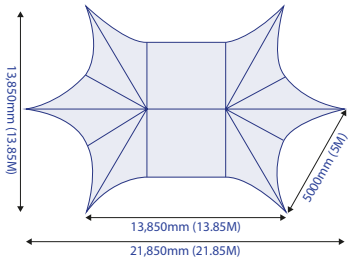

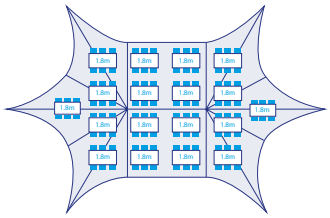

Suggested capacity for seating with chairs - 280

Suggested capacity for seating with tables - 108

NEXT PAGE